STAR WALL

Lenght 55 cm
Wall Hung Smart Toilet

Small size, big space
Save bathroom space



Lenght 55cm

At least 30% space saving.



Comfortable large seat



One-piece integrated design

Intelligent integrated design,More easy to maintain, No need additional in-wall water tank.Just install the load-bearing bracket.





High load-bearing wall-mounted type
The bottom area is more easier to cleaning

Built-in water tank
Strong driving force

The dual pumps pressurize water at the same time.
Compared with the single-pump system ,
the dual pumps flushing is more stronger and stable.

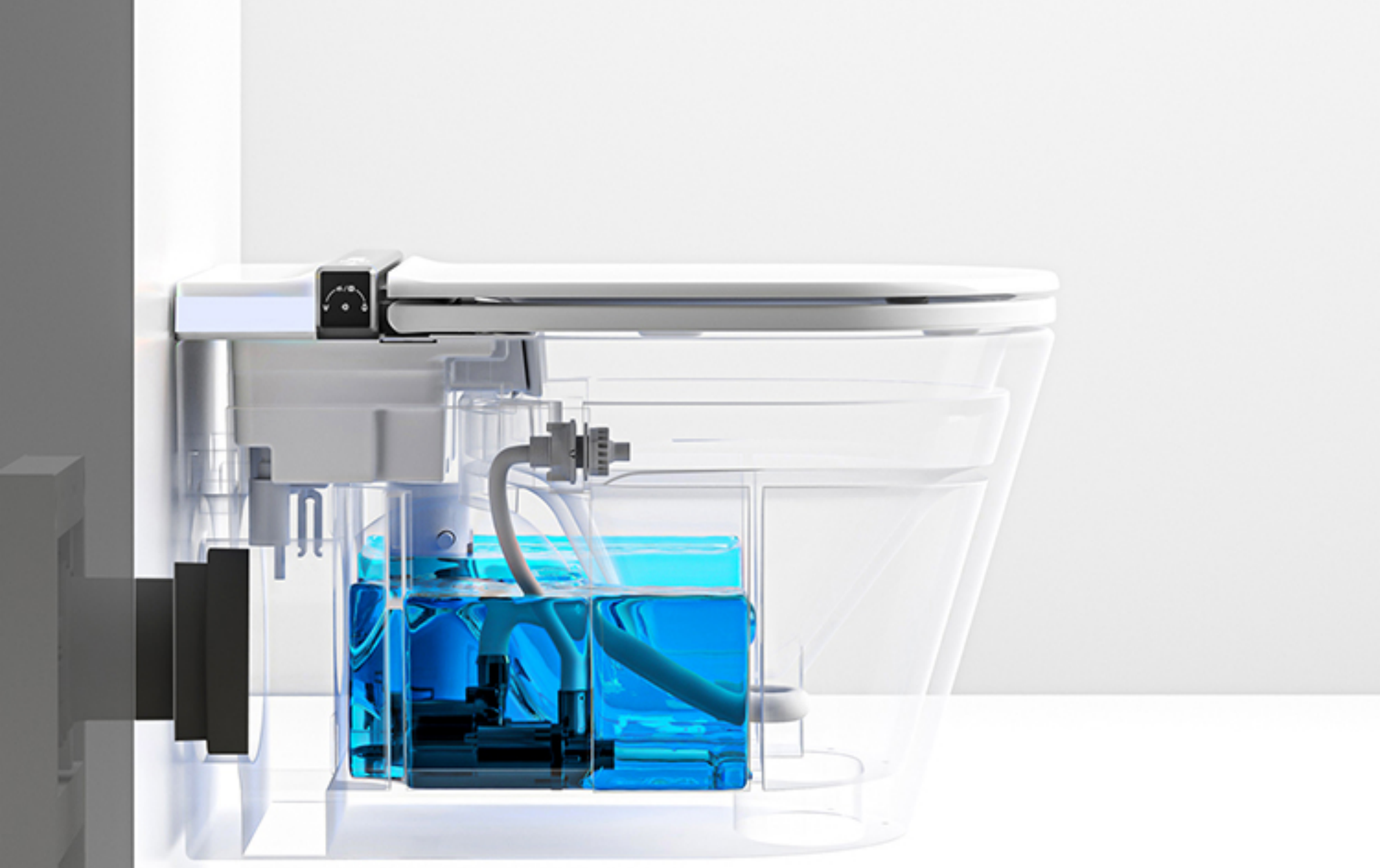

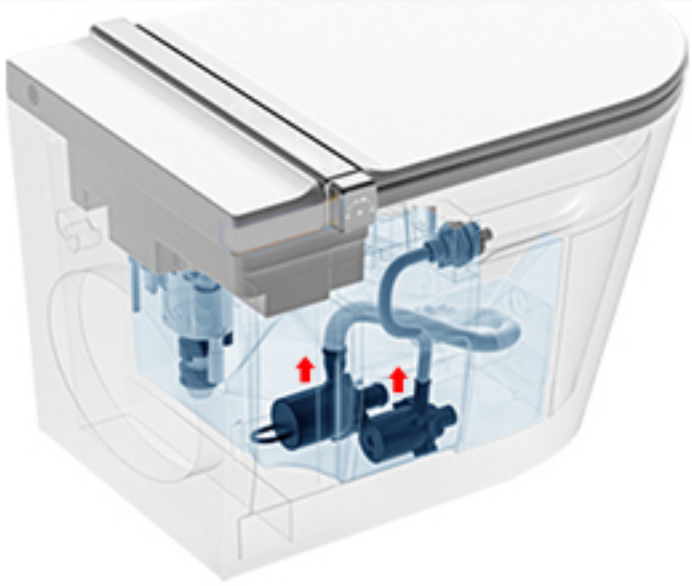

Double pump booster

Strong driving force

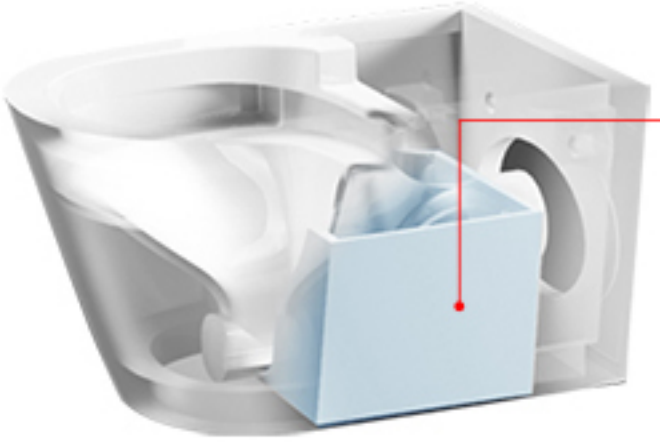

Built-in water tank

more stable flushing

Built-in foam liquid container

Hidden, clean and simple,
does not affect the overall beauty

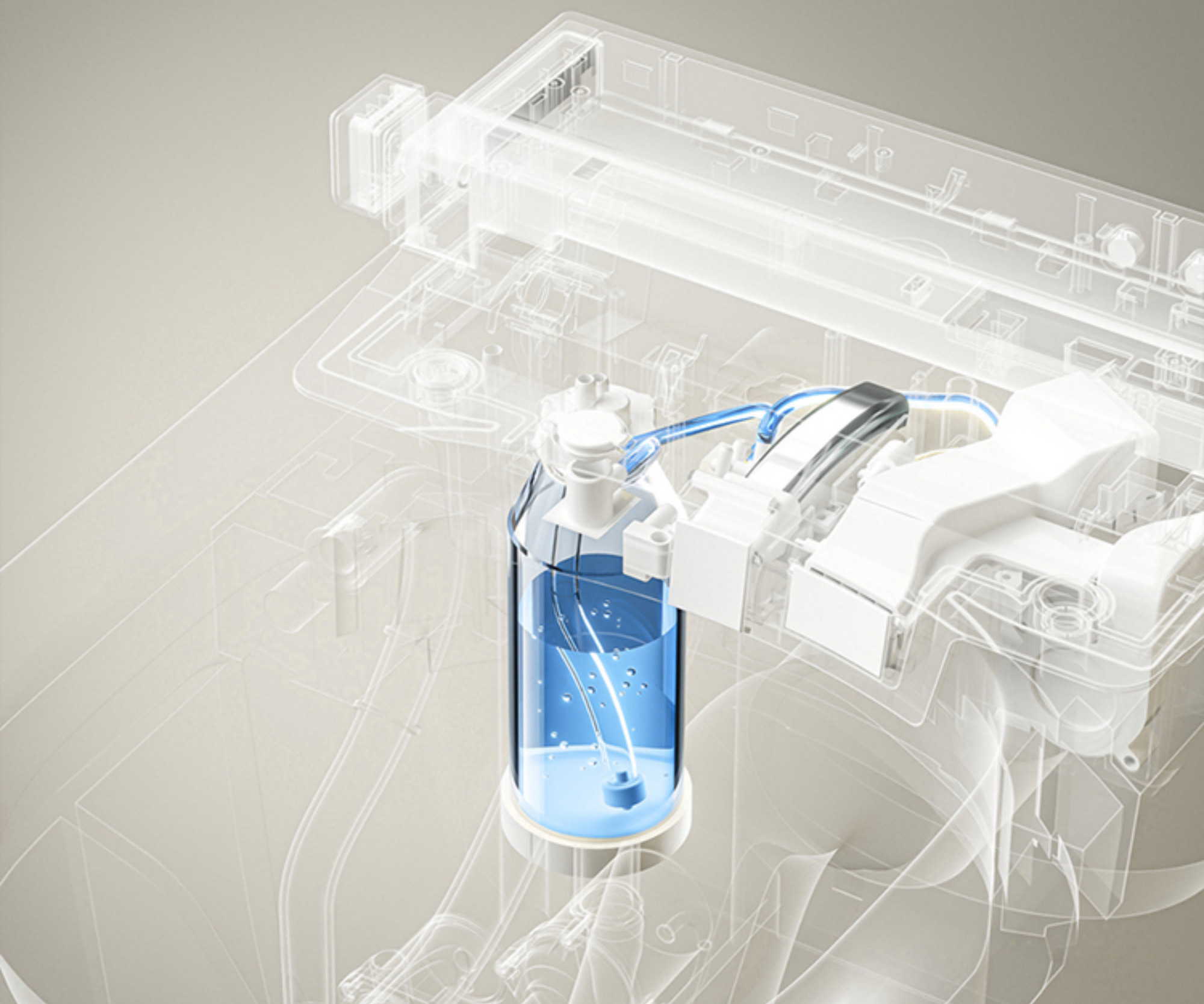



Built-in liquid filling port

Hidden, clean and simple



Ordinary foam

The external type is easy to fall.



Effectively prevent splashing , odor barrier,
anti-adhesion and inhibit bacteria

UV Sterilization

It automatically disinfects 360°when lid is closed. Without any blind spots, toilet bowl and nozzle are disinfect completely.



Automatic flip cover

Built-in high precision motion sensor, the toilet cover opens automatically once human body approaches the smart toilet.
Never bend over and hand touching. Applicable to all size of bathrooms.



for Female



Open cover when approaching

Using

Automatic flushing and closing cover after leaving

for Male



Open cover when approaching

Open seat by foot sensor

Using

Automatic flushing and closing cover after leaving

High efficiency laser foot induction Understand men better

Laser sensor emits laser vertically downwards.
Sensor is active when foot stretches.

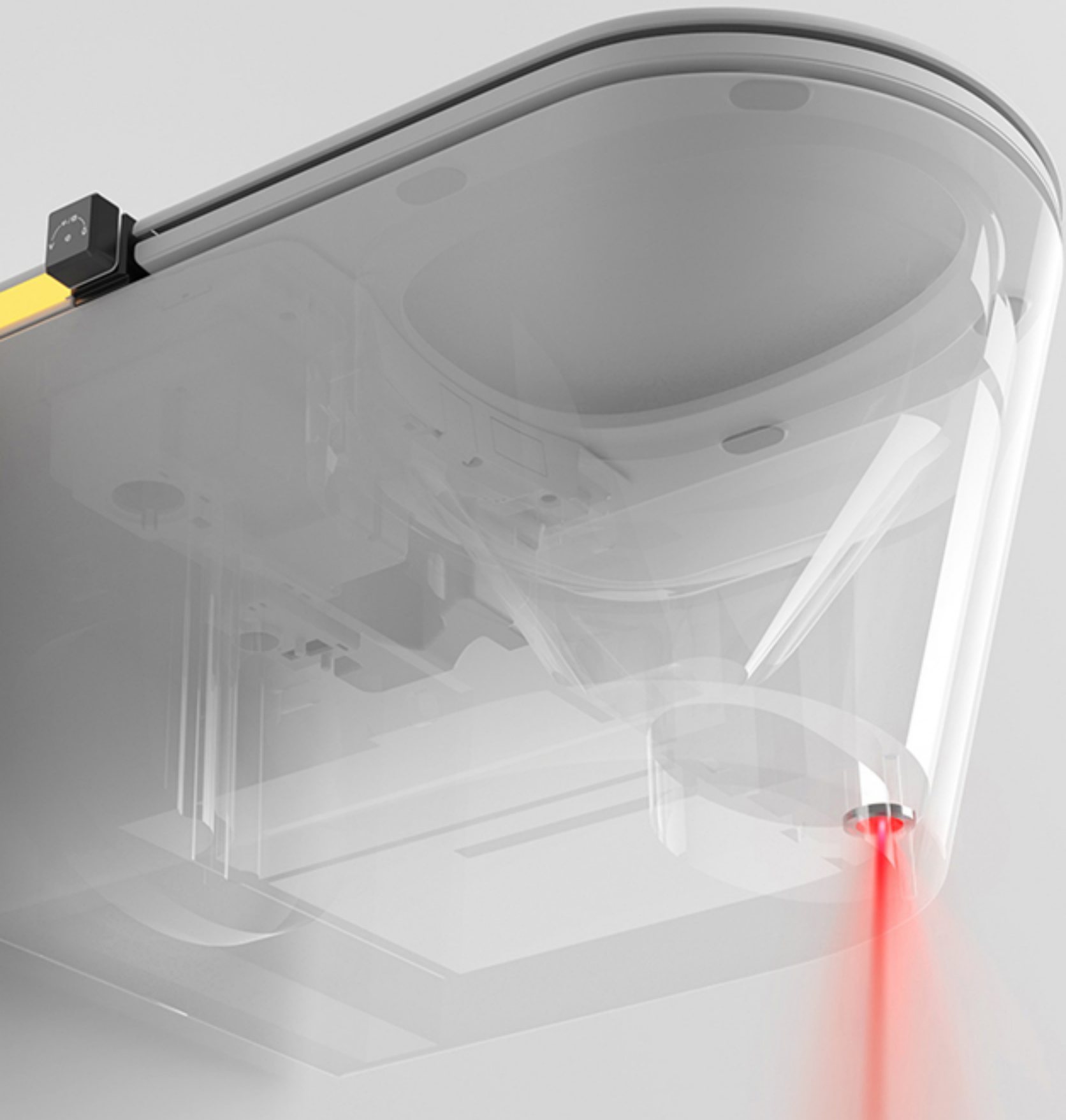



Laser type foot sensor

Faster and more accurate
response without lifting your feet

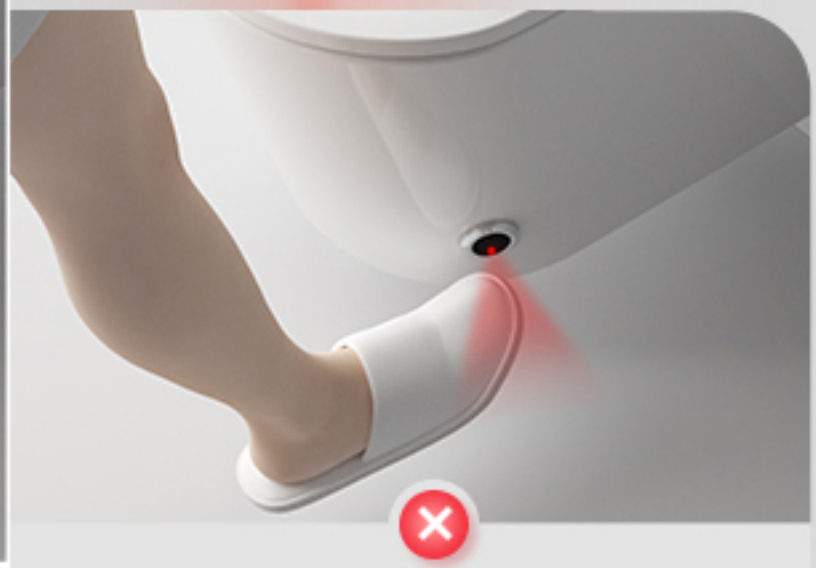

Infrared type foot sensor

Sensing is unstable and
it requires to lift the feet

For Female



Open cover by foot sensor

Using

Automatic flushing and closing cover after leaving

For Male



Open cover and seat by foot sensor

Using

Flushing by Foot Sensor

closing cover after leaving

Convenient Side Knob

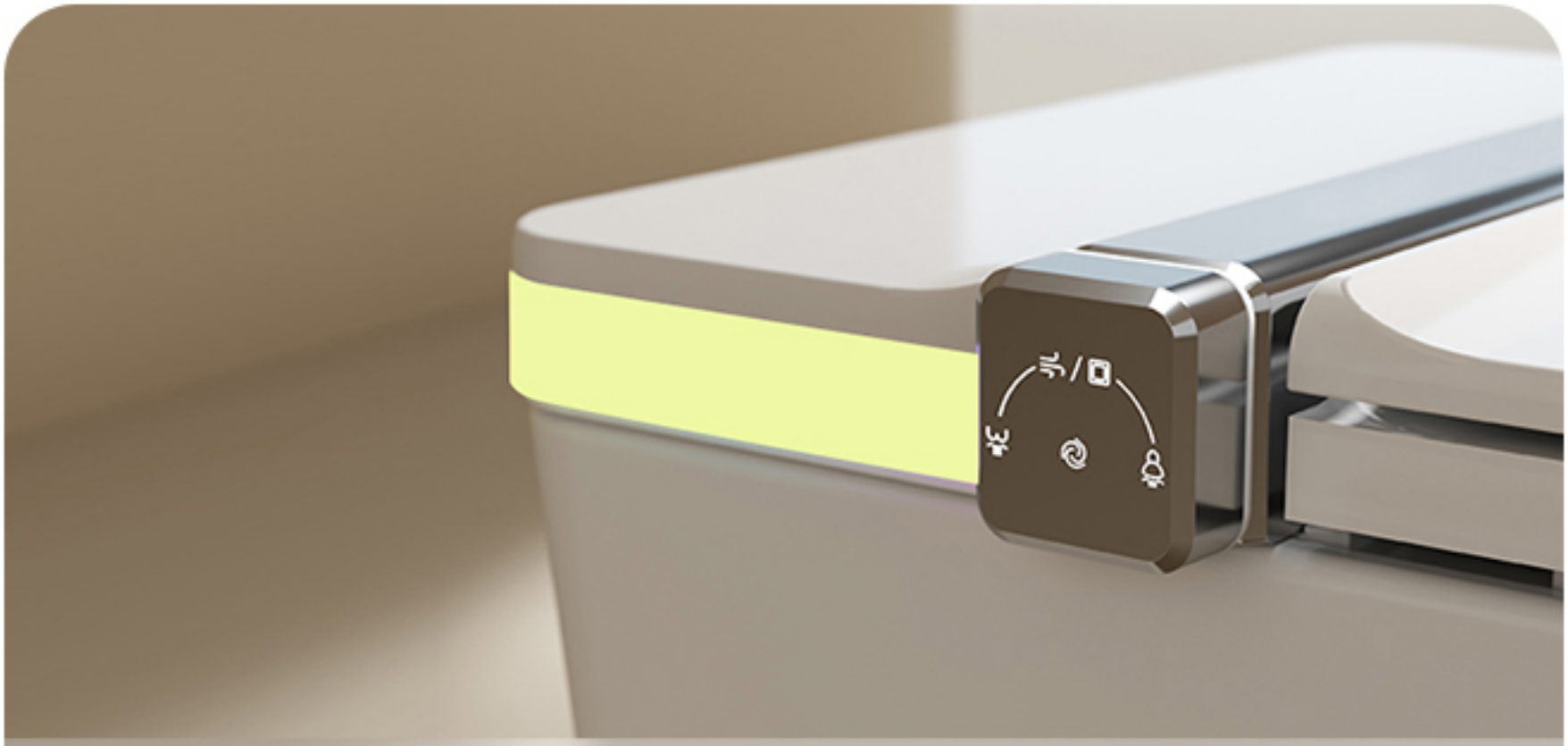



Rotate clockwise,
Female washing
Rotate counterclockwise,
Buttock washing



Press once,
Stop/Flush/
Drying

Double User Memory

control comes with the user's memory function, which records the user's habit of toilet. Switch to exclusive mode with one click.

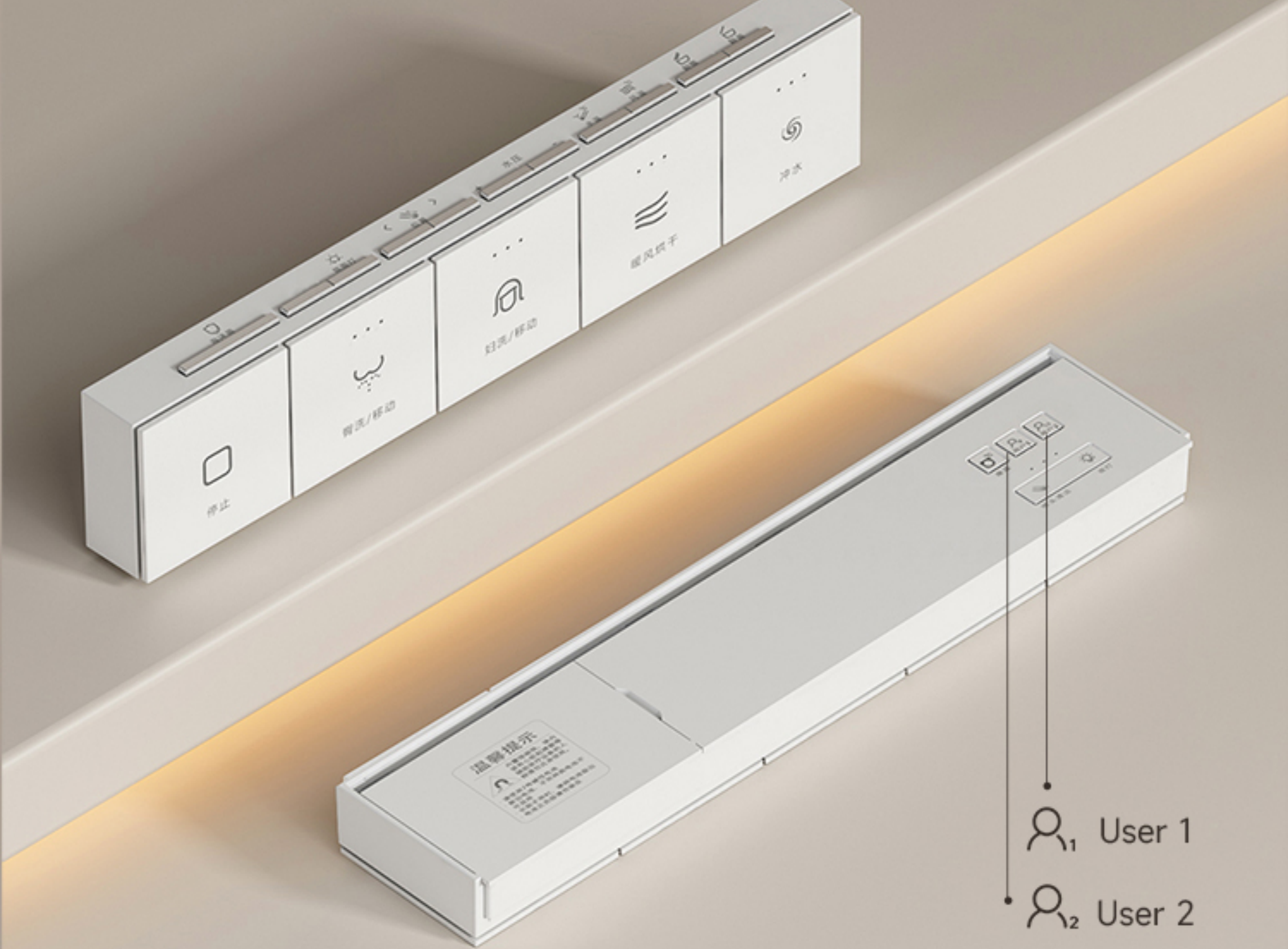

Example
User 1: Children's exclusive settings
Seat Temp. 39 ° | Warm wind 40 ° | Children's cleaning

Example
User 2: Elderly’s exclusive settings
Seat Temp. 35 ° | Warm wind 35 ° | Massage cleaning

Self-Adjust Temp by Seasons

Self-adjust temp. adapt to four seasons.



Automatic temp. adjustment with the season

Room Temp ≈34°C ≈37°C ≈ 39°C



Automatic temp. adjustment with the season

Room Temp ≈34°C ≈37°C ≈ 39°C



Automatic temp. adjustment with the season

Room Temp ≈45°C ≈50°C ≈ 55°C

Multiple Clean Modes

Before and after cleaning , Nozzle self-cleaning



Buttock Washing



Female Washing



Mobile Washing

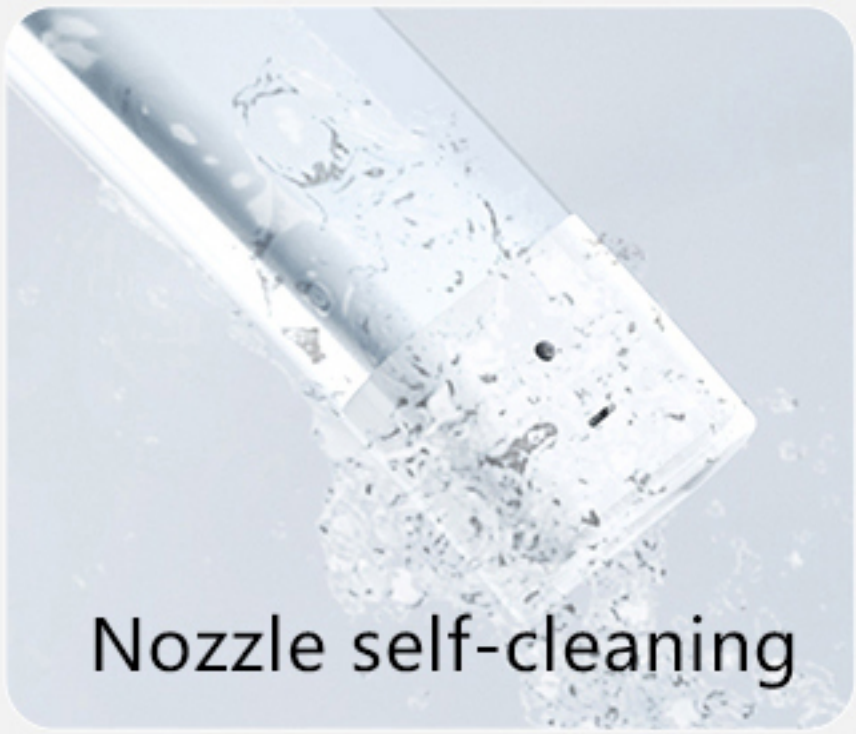

Nozzle self-cleaning

More Details



Deodorizations



Night light



HD LED display



Silent Cover

Atmosphere Light

Colorful lights and single color light can be switched.Meet your personal preferences.



Product Information

Uint: mm

Side View ▼

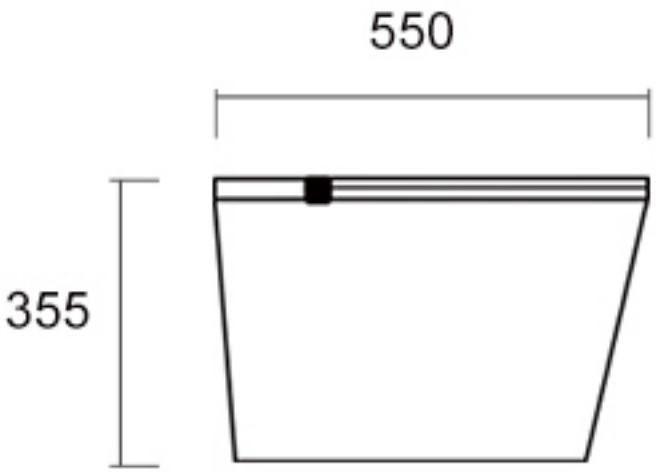

Poster View ▼

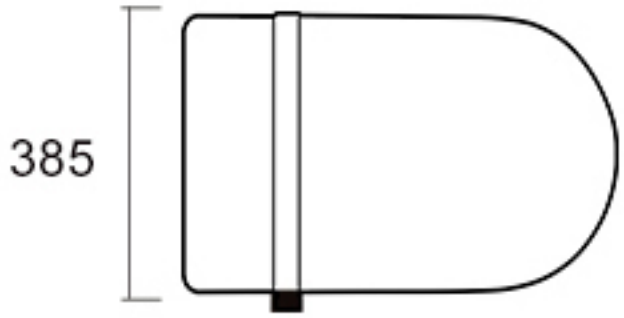

Seat Size ▼

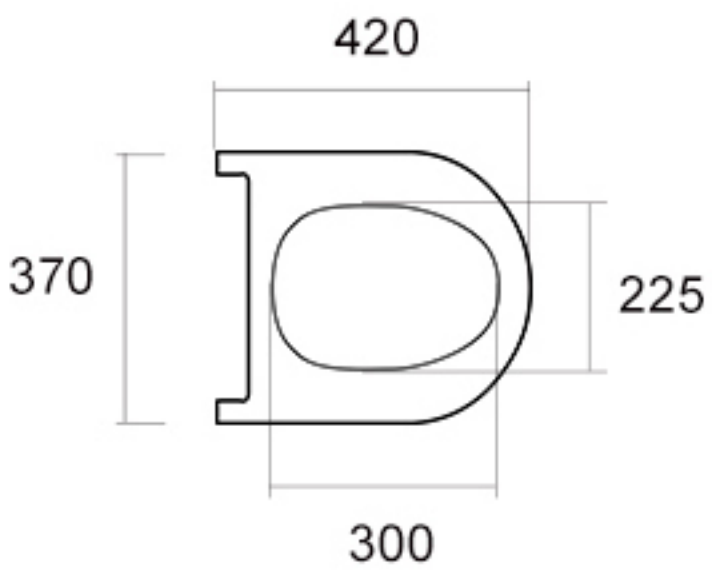

Ceramic Body Inner Size ▼

