Mini 55cm

Lenght 55cm

Super fan speed up to 110000 rpm

A small typhoon is coming,
quick drying in 60 secs



60 secs quick drying

The rotation speed up to 110000r/min, which is equivalent to wind speed at 29 m/s. It can quickly take away the moisture left on the skin in 30 seconds, making paperless toilet to be true.

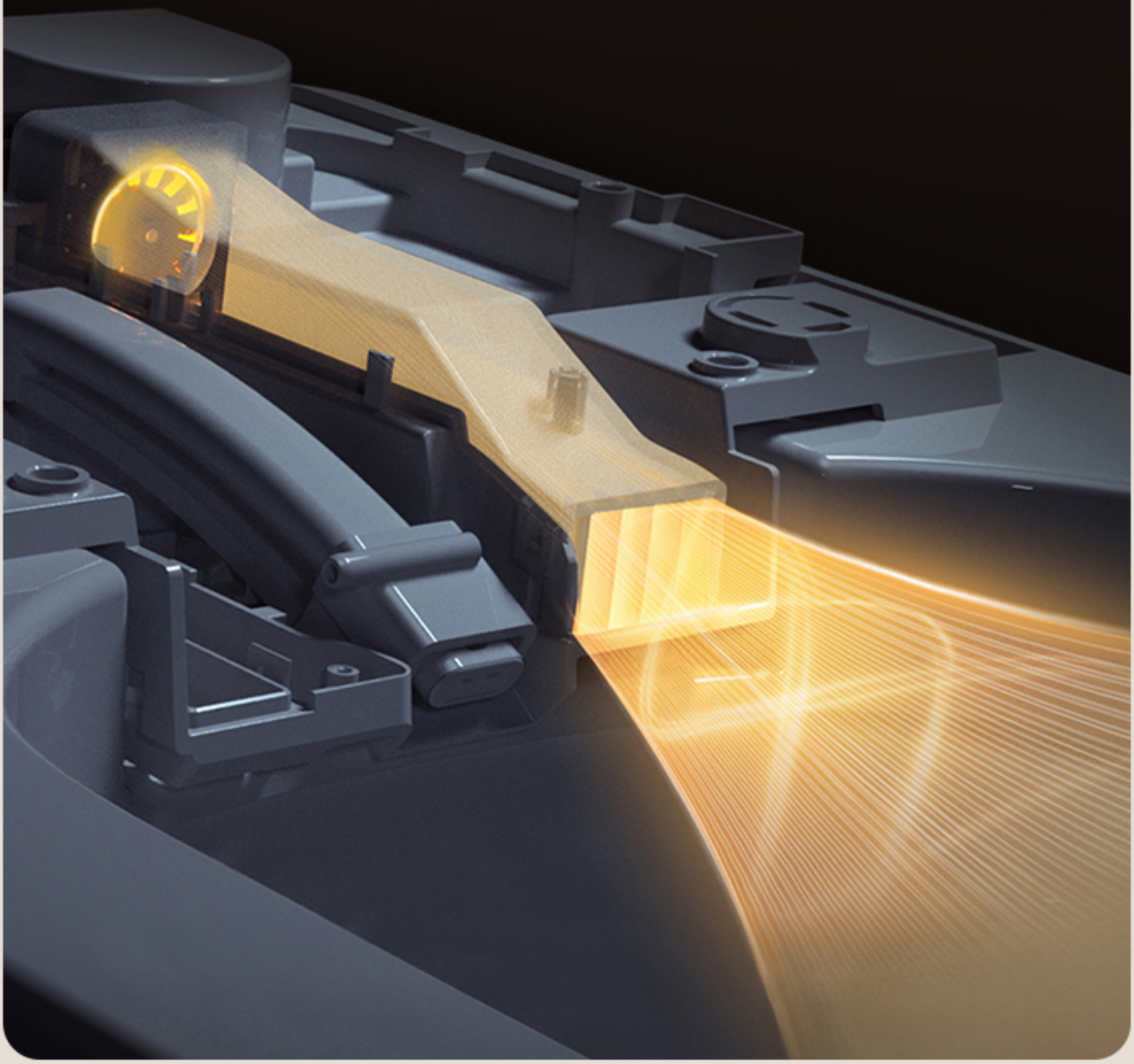

Air temperature can be adjusted in 4 levels



Air speed can be adjusted in 5 levels



Lenght 55cm

At least 30% space saving.



Comfortable large seat



Special base design Closer to the wall

The special base design eliminates the need to reserve space on the back. The pipe pass through small hole, which allows the smart toilet to be close to the wall after installation. Optimize space, maximum reduce sanitary blind spots and make it more beautiful.





The pipe pass through small hole

With filter, more hygienic washing

Built-in water tank
Strong driving force

The dual pumps pressurize water at the same timeCompared with the single-pump system ,the dual pumps flushing is more stronger and stable.

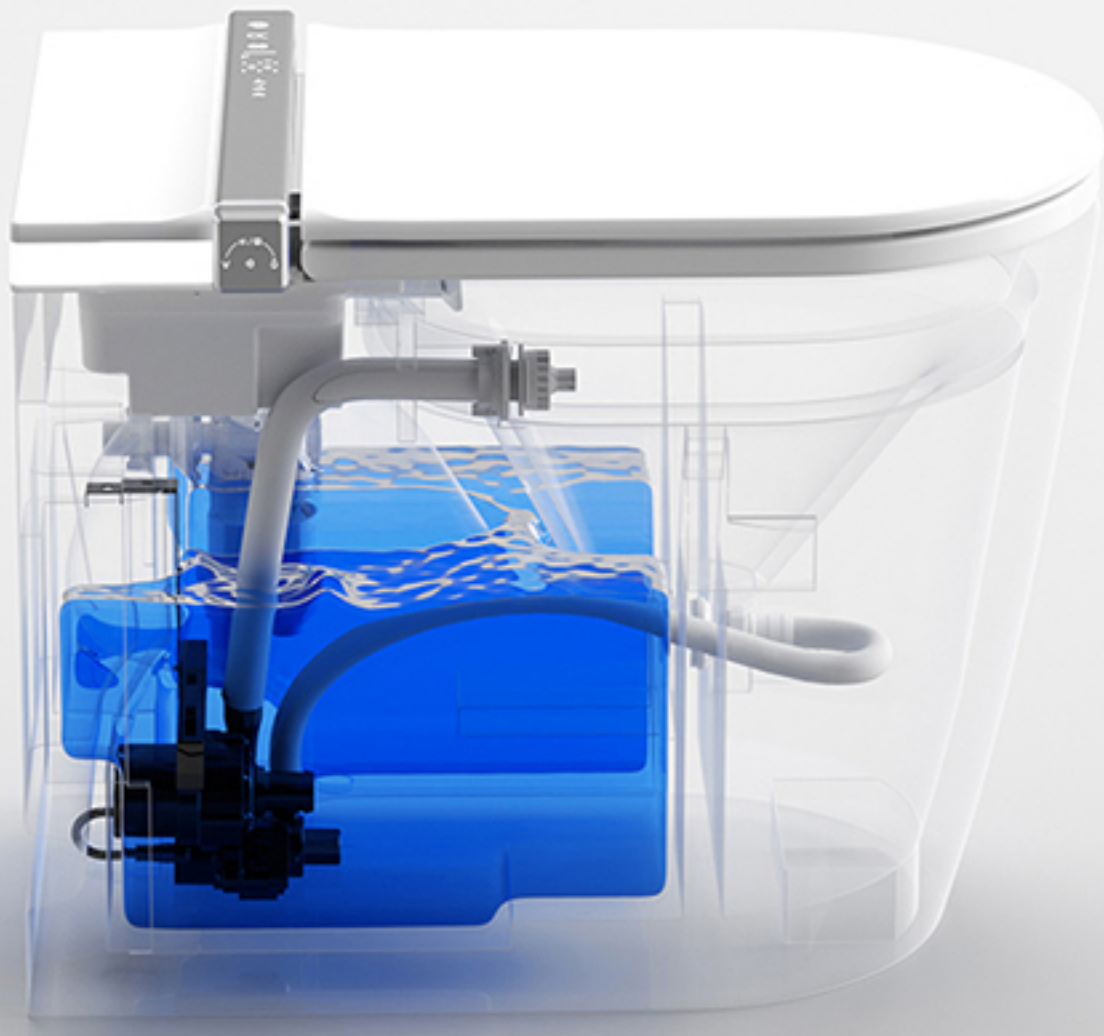



Double pump booster

Strong driving force

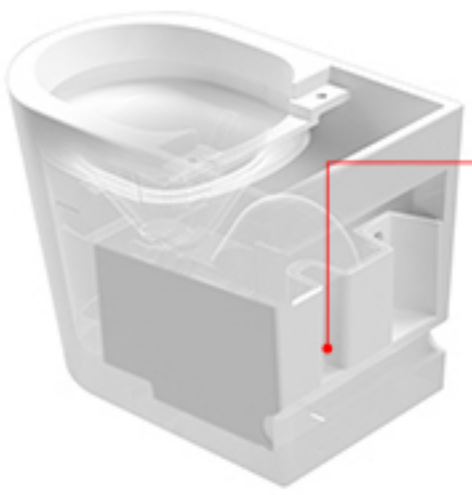

Built-in water tank

more stable flushing

Built-in foam liquid container

Built-in foam liquid container, easy to refill
Effectively prevent splashing , odor barrier, anti-adhesion and inhibit bacteria.

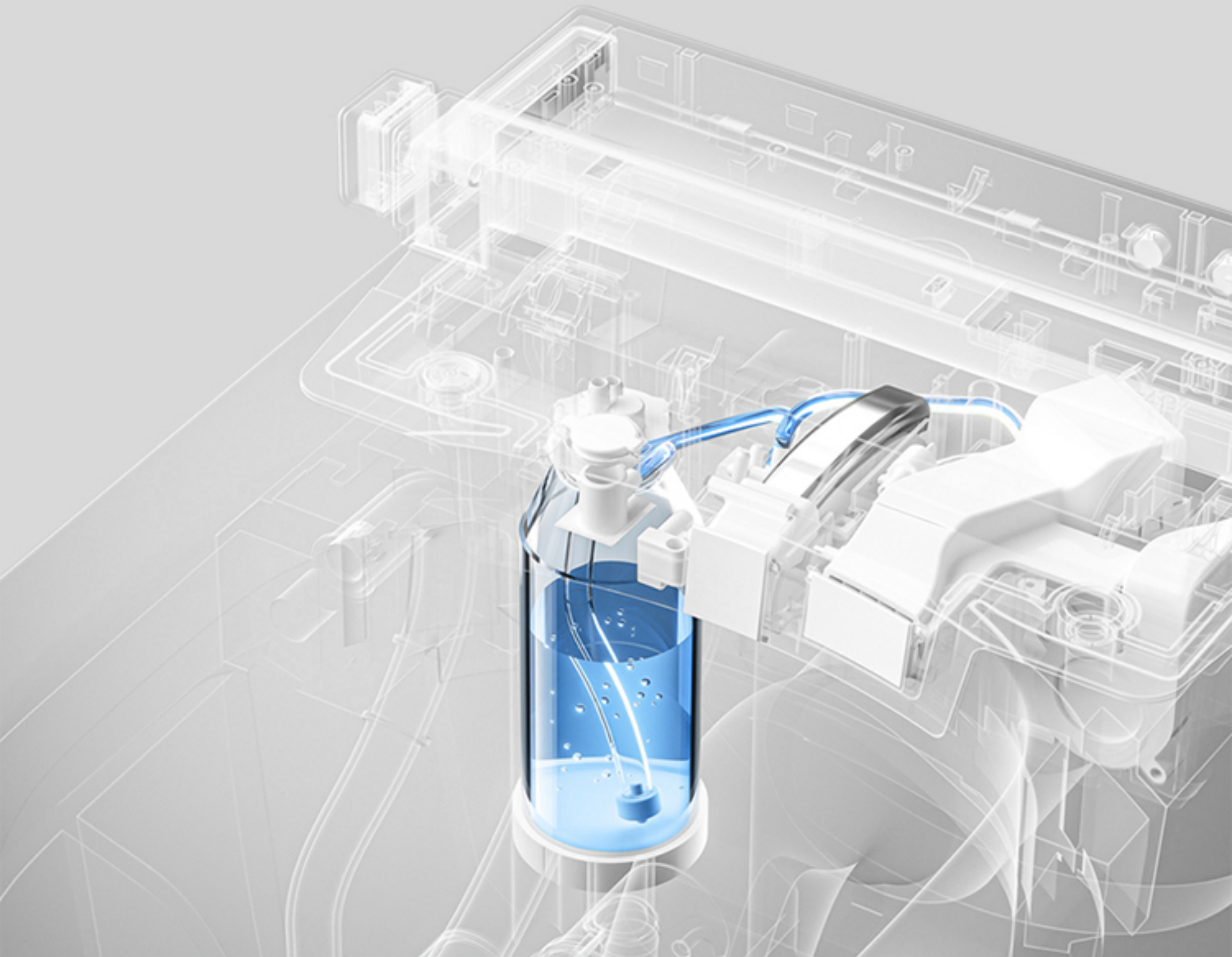

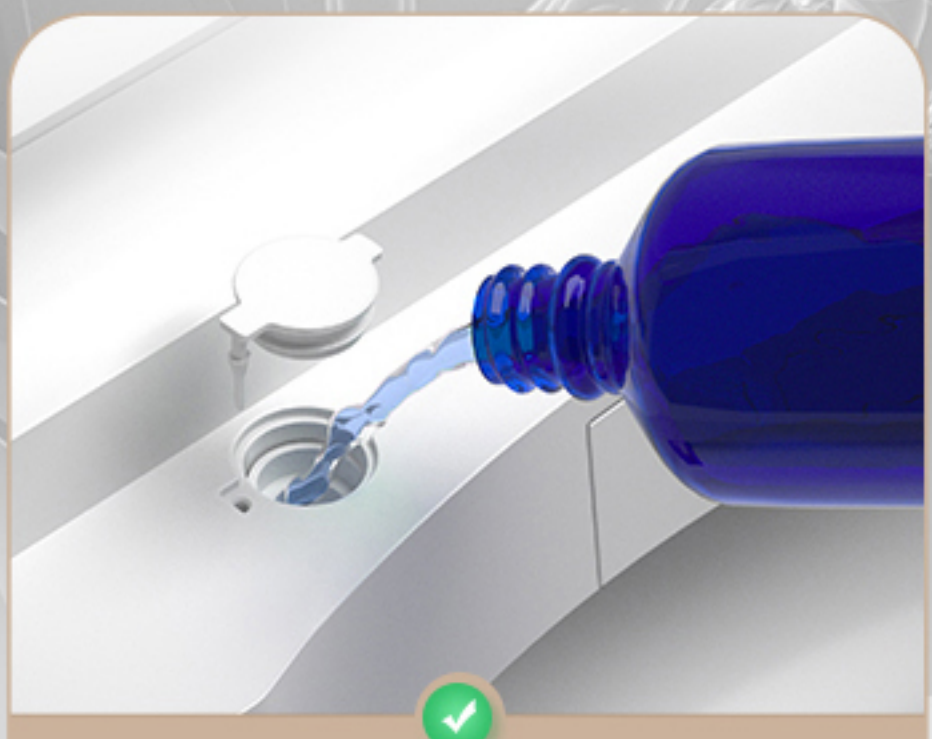

Built-in liquid filling port

Hidden, clean and simple



Ordinary foam

The external type is easy to fall.


Effectively prevent splashing , odor barrier,
anti-adhesion and inhibit bacteria

UV Sterilization

It automatically disinfects 360°when lid is closed. Without any blind spots, toilet bowl and nozzle are disinfect completely.



MINI SMART TOILET

55CM LENGTH

Automatic flip cover

Built-in high precision motion sensor, the toilet cover opens automatically once human body approaches the smart toilet.Never bend over and hand touching. Applicable to all size of bathrooms



Female



Open cover when approaching

Using

Automatic flushing and closing cover after leaving

Male



Open cover when approaching

Open seat by foot sensor

Using

Automatic flushing and closing cover after leaving

MINI SMART TOILET

55CM LENGTH

Smart foot sensor
Understand men better

Stretch your foot to flip cover/seat .
Close cover and flushing automatically after leaving.
Free your hand and waist during the whole process



Female



Open cover by foot sensor

Using

Automatic flushing and closing cover after leaving

Male



Open cover and seat by foot sensor

Using

Close the cover and seat by foot sensor and automatic flushing

Double User Memory

The remote control comes with the user's memory function, which records the user's habit of toilet. Switch to exclusive mode with one click.

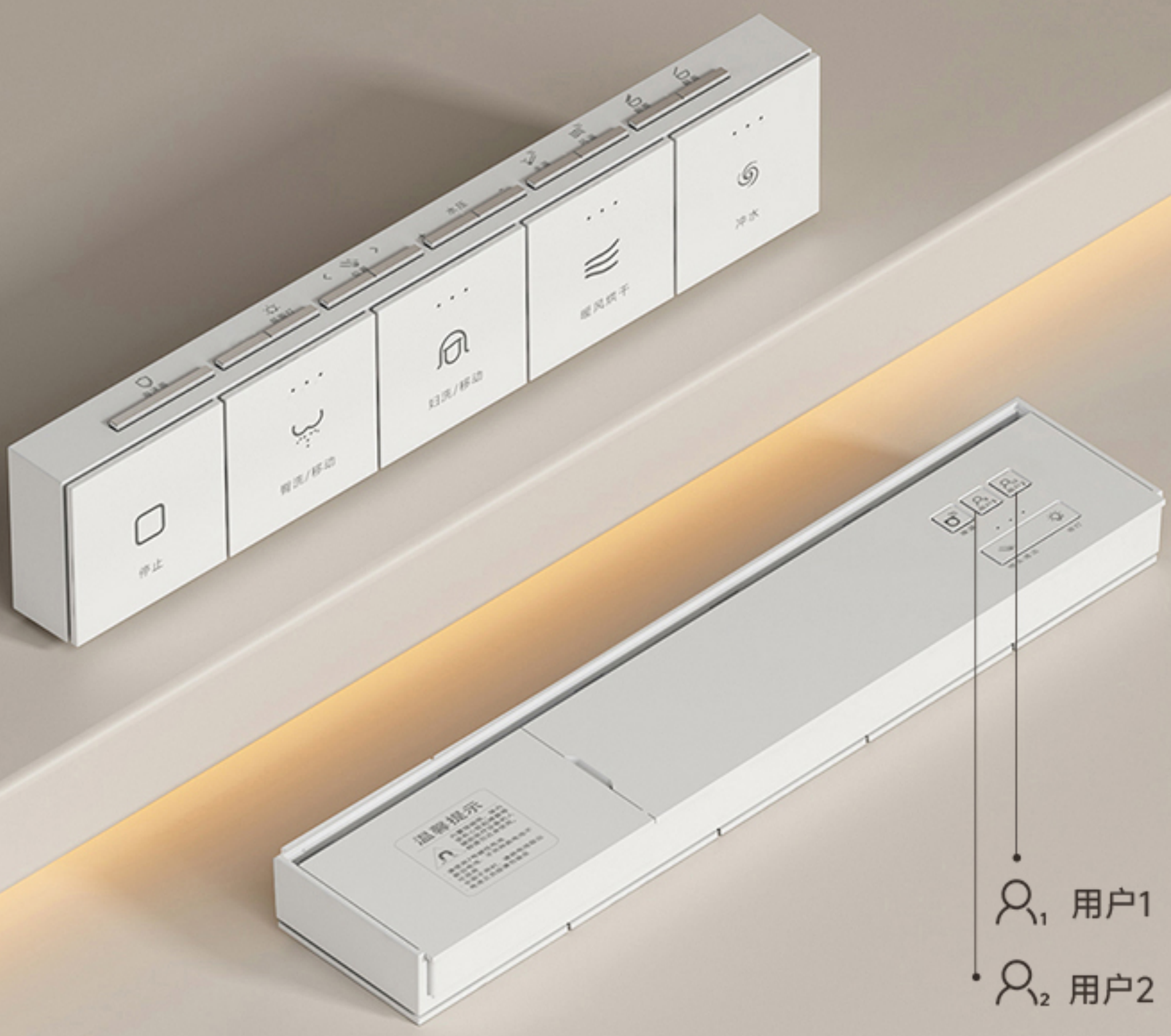

Example: User 1: Children's exclusive settings

Seat Temp.39°C | Warm wind.40°C | Children's cleaning

Example: User 2: Elderly’s exclusive settings

Seat Temp.35°C | Warm wind.35°C | Massage cleaning

Convenient Side Knob

Easy operation , achieve daily function by one-touching



Rotate clockwise
Female washing

Press to flush when leaving seat

When seated, short press to dry/ stop

Rotate counterclockwise
Buttock washing

Atmosphere Light

Colorful lights and single color light can beswitched.Meet your personal preferences.















Note : There may be slight deviations in the picture , please refer to the actual product!

MINI SMART TOILET

55CM LENGTH

Self-Adjust Temp by Seasons

Self-adjust temp. adapt to four seasons.



Automatic temp,adiustment with the season

Room Temp ≈34°C ≈37°C ≈ 39°C



Automatic temp,adiustment with the season

Room Temp ≈34°C ≈37°C ≈ 39°C



Automatic temp,adiustment with the season

Room Temp ≈34°C ≈37°C ≈ 39°C

Multiple Clean Modes

Before and after cleaning , Nozzle self-cleaning



01

Buttock Washing



02

Female Washing



03

Mobile Washing



04

Nozzle self-cleaning

More Details



Deodorizations



Night light



HD LED display



Silent Cover

Product information

Unit: mm

Side View ▼



Poster View ▼

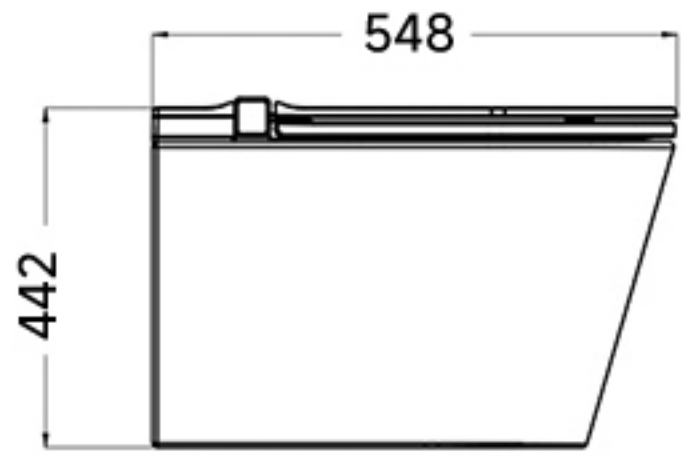

Seat Size ▼

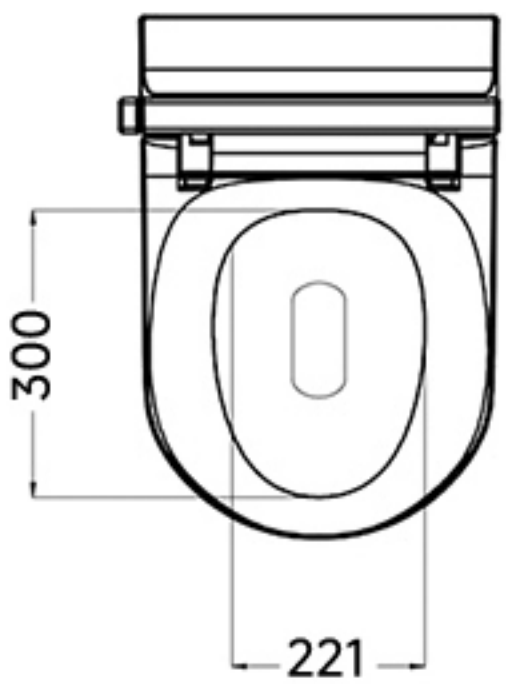

Ceramic Body Inner Size ▼

